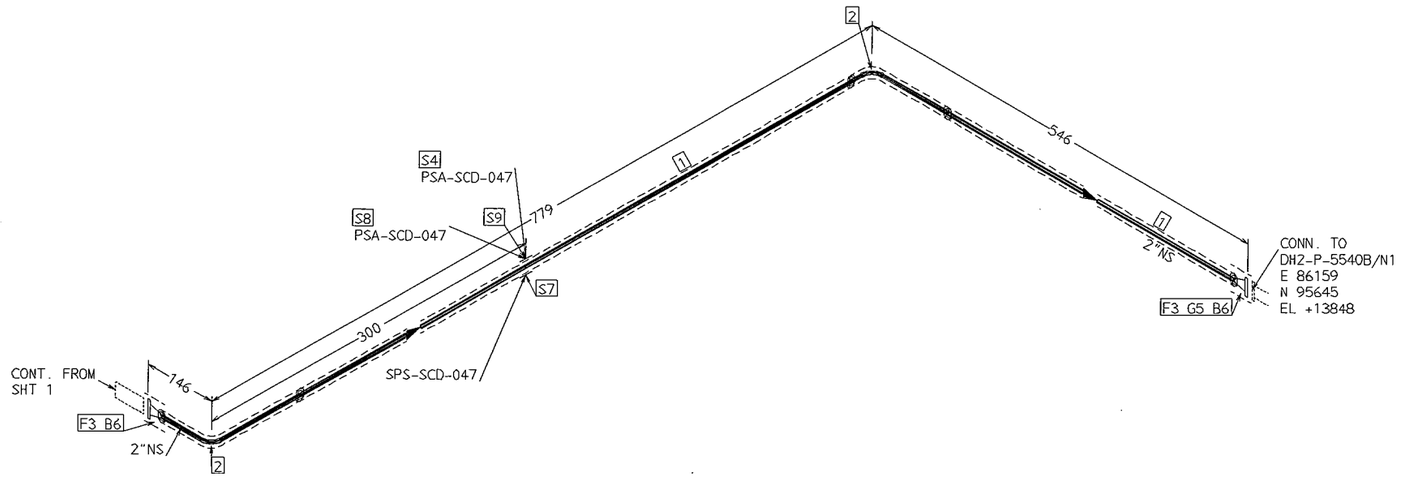

FABRICATION MATERIALS

PT NO	COMPONENT DESCRIPTION	N.S. (INS)	CLASS	QTY
	PIPE			
1	PIPE;SEAMLESS;;BE;;ASME B36.10 API 5L;GR.B OR ASTM A106;GR.B;NACE MR0175; STD	2	B	1.1M
	FITTINGS			
2	ELBOW;90DEG.LR;SEAMLESS;BW;;ASME B16.9 ASTM A234;GR.WPB;NACE MR0175; STD	2	B	2
	FLANGES			
3	FLANGE;;WN;RF;300#;ASME B16.5;SMOOTH FINISH RA 3.2 TO 6.3 MICRONS ASTM A105;NACE MR0175;; STD	2	B	2
	SUPPORTS			
4	PIPE SHOE HOLD DOWN PS13-50-A-0-0	2	-	1

ERECTION MATERIALS

PT NO	COMPONENT DESCRIPTION	N.S. (INS)	CLASS	QTY
	GASKETS			
5	GASKET;SPIRAL WOUND;4.4MM THK;300#;ASME B16.20 WND:SS316;FLR:GRAPHITE;INNER & OUTER GUIDE RINGS:SS316;NACE MR0175	2	B	1
	BOLTS			
6	90 STUD BOLT WITH HEAVY HEX. NUTS STUDS: ASTM A193-B7, NUTS: ASTM A194-2H FLUOROCARBON COATED WITH AMERI-COTE OR APPROVED EQUAL	5/8	B	16
	SUPPORTS			
7	SPS-SCD-047	2	-	1
8	PIPE SHOE PS04-50-2-A	2	-	1
9	T-POST PS32-02-01	2	-	1

NOTES:

1. COORDINATE REFERENCE FROM COLUMN B IS N 100,000 & COLUMN 2 IS E 100,000

DESIGN PRESS: 3800 kpag	DESIGN TEMP: 110/0 °C
TEST PRESS: 7650 kpag	TEST WITH: Water
RADIOGRAPHY: 100 %	STRESS RELIEVE: NO
INSULATION SPEC: DHF-00-M-S-0002	
COATING SPEC: DHF-00-M-S-0003	

STRESS CATEGORY

THIS LINE HAS BEEN STRESS ANALYSED
DO NOT ALTER THE ROUTING/MODIFY THE SUPPORTS
WITHOUT THE PRIOR APPROVAL OF RANHILL WORLEY

P&ID REF: WHP -DH2-R-D-1067

REV	DATE	BY	DESCRIPTION	CHECK'D	WP APPR'D	VSP APPR'D	DATE
C0	29/05/09	HAZ	APPROVED FOR CONSTRUCTION	PSV/AH	EM		

DAI HUNG PETROLEUM OPERATING COMPANY
DAI HUNG OIL FIELD DEVELOPMENT PHASE 2

VIETSOVPETRO

Ranhill Worley

CAD File No.: WHP-DH2-P-D-1039-SCD-2

WP Project No.: 04211244

Scale: NTS

PLANT: **WELLHEAD PLATFORM - DH2**

PDMS LINE NO.: SCD-2"-PL-B-1039-H-40

Drawing No.:	SHEET NO.	REV.
WHP-DH2-P-D-1039-SCD-2	2 OF 2	C0